VHFER

50 MC. AND UP

LEARN BY DOING

Volume 4, No. 4 April, 1966

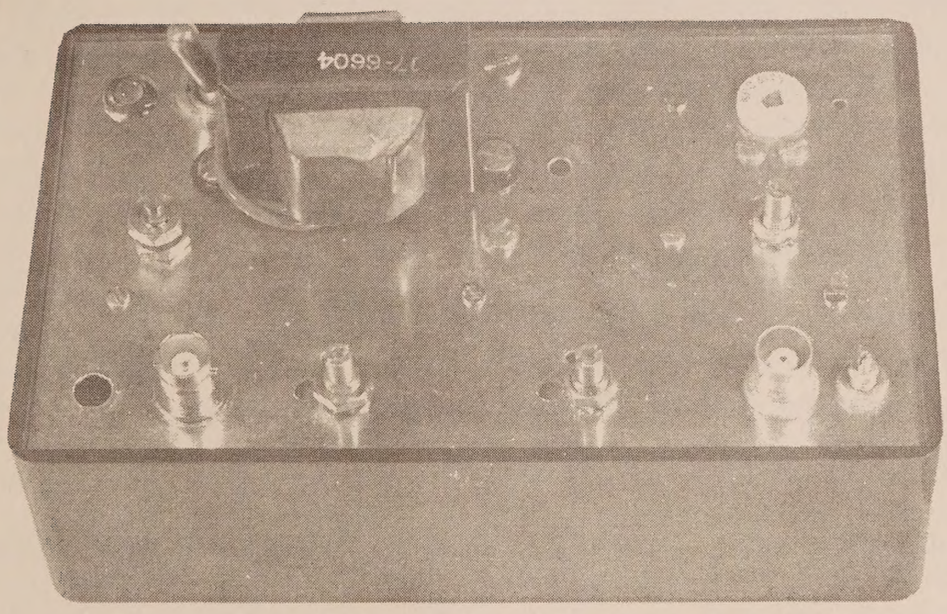

A 220 MHZ CONVERTER

A 432 DX MAN'S CONVERTER

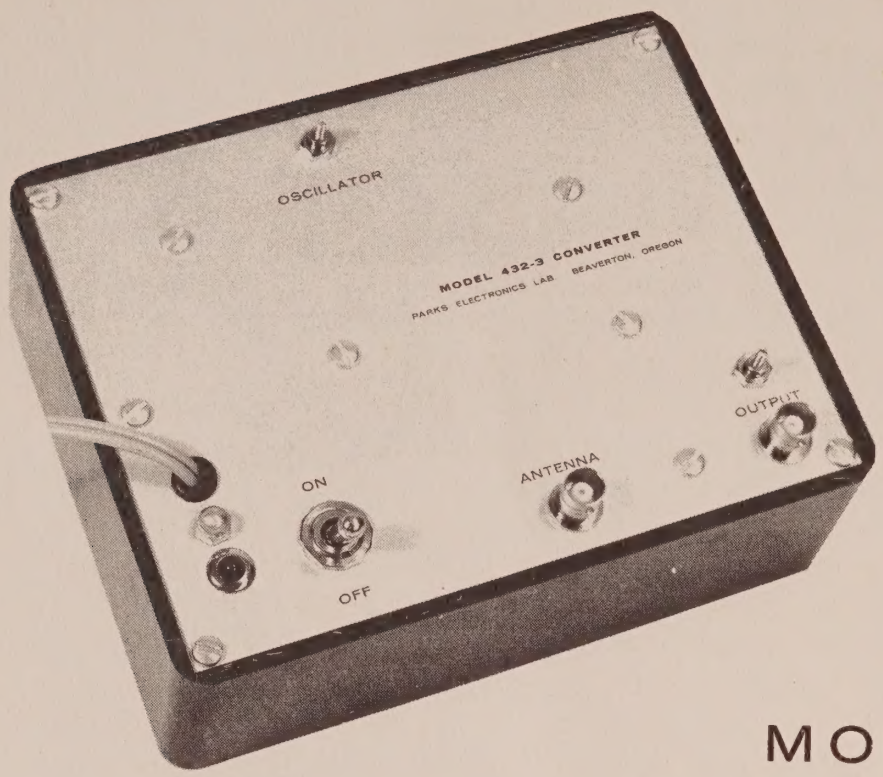

MODEL 432-3

$49.95 POSTPAID

NEW FEATURES:

--All solid-state design
--Zener-regulated a.c. power supply
--Extremely low-noise front end-- 4 d.b. or less.
--High image and I.F. leak-through rejection
--Excellent frequency stability.

This converter uses the Texas Instruments TI-XMO series transistor. We pick the best from the 01 and 06 types to give you performance equal to or better than the general run of the former TIXMO5, apparently no longer available---at least for now. From our tests these transistors are superior in performance to the 2N3399 we formerly used and cost much less. They're also less expensive for you to replace if you damage them with r.f. This converter has a tuned input, something our previous converters and preamps did not have. It cuts down on interference from other stations in the big cities.

ORDERING INFORMATION: Price is $49.95, postpaid. Add 35¢ for Special Handling, a fee charged by the post office for faster delivery. Add $2.50 for Air Mail.

I.F. Ranges available put 432 Mc. at 26, 27, 28.1, 29, 30.5, 49 or 50 Mc.

Type BNC connectors only.

PARKS ELECTRONICS LAB.

ROUTE 2 BOX 35 BEAVERTON, OREGON

Moonbounce Newsletter

by Victor A. Michael, W3SDZ
Box 345, Milton, Penna.

They say the longest journey begins with one step and thus it is with setting up a station to work the EME circuit. It is my fondest hope that there will be enough amateurs throughout the world who will take that one step and all the rest along the way to getting a system going that can make the grade of hearing its own echoes. Once this is accomplished, nightly contacts with Europe from the U.S. can be commonplace -- the system and the people behind the systems will never be commonplace.

We have worked most of the winter toward solving some of the problems that can put an EME system on 432 within reach of the serious VHF worker without the financial problem being too great. The first answer came last month with the publication of the TIXM05 preamp. While I haven't had time to photograph and write up the details, the pair of RCA 8122's I have in a conventional push-pull amplifier are an inexpensive answer to the power generation problem. If you would like to try building an amplifier using these tubes, you can use the basic circuit and layout described in the 432 KW in QST of Aug. 64. The only modifications have to be made to the grid circuit, as the input capacity of the 8122 is much less than the 4CX300. With the receiver and the transmitter now in the reach of the average serious worker, there remains the antenna problem. Building and mounting a 27 foot dish such as I have in the field behind the house is difficult and expensive. With this in mind, we have discussed antennas of every description, size and shape. We came up with easy to build types, but they would be too difficult to mount. We came up with easy to mount types, but then the antenna would be difficult, expensive and large. When I speak of WE, I refer to Dick Turrin, W2IMU and your writer. Dick works at the Crawford Hill site of Bell Labs and his special area is antennas for both point to point work and satellite communication. Needless to say, Dick is a storehouse of knowledge on the subject. In addition he is used to making "good" antennas that do not compromise much. With this type of background, he gets a little impatient with some of my typical amateur type shortcuts. We had a few goals in mind in our antenna design program: first the antenna must be something a serious worker could build with as little help as possible. This meant the antenna should be built on the mount -- thus the mount would have to be near the ground. Second, the cost should be as small as possible -- something less than 500 dollars (as much less as possible). Third, the materials should be available to the general public and workable with simple tools. Fourth, the gain must be in at least the 30 db region on 432.

Dick has now come up with the basic idea for such an antenna. At this point we think it meets all the requirements I mentioned above. I'm not going to take up the space of the VHFER at this point to describe what we have so far, because we want to work out some of the fine points first. We also plan to build the antenna this summer if possible (I still have a couple of acres left that do not have antennas on them yet Hi! -- my wife just read that line -- I won't repeat what she said) and intend to photograph the project very carefully so we can write a real "nuts and bolts" type article on the subject. This all means you won't be able to build the antenna until next summer. I can offer two alternatives, first, I have written up a short memo on the

subject with some sketches of what we have so far -- send me a stamped, self-addressed envelope and I will send you a copy of the memo. Put enough postage on the envelope for two ounces, as the memo takes up several pages. As soon as we have complete working plans for the antenna, I will send them along to the VHFER for publication.

A few notes about the TIXM05 preamp might be in order at this time. First of all the problem seems to be in getting the transistors. I ordered two hundred of the units direct from the Texas Instrument factory in February (I even paid for them) and I haven't received them as yet, but delivery has been promised for May 15. I can't be sure that this delivery date will be met. I have received many orders for some as per my offer in the last column. I started to answer these with a letter telling the story, but I finally got too many to answer. Here is the story -- I'm holding all the checks, cash and money orders -- if you can get some elsewhere, drop me a card and I will return your money. Otherwise, as soon as I get shipment from TI, I will forward the units ordered. We have now had time to really use our preamp and evaluate its performance on the dish. I am happy to say that it really works just as we had measured it on the bench. It makes a 4db improvement in sun noise measurements over a 3478 preamp and when it is mounted at the antenna to overcome our 1 db feedline loss we measure just slightly less than 10 db of sun noise with the 27 foot dish. The best we ever did last year with the old feed on the antenna and the 2N3478 preamp was just under 4db of Sun noise. This is quite a system improvement. While at this writing we haven't had a chance to make echo measurements, it appears that we should be in good shape to really "hear" echo returns this year. I hope to have a favorable report on this next month. If you have a system that can hear echoes, I sure would like to hear from you about some schedules.

I got so many letters asking for some more information about the sequencing system we use to protect out transistor preamps, that I thought I better give the details in the column. The schematic appears in Fig. I. Here's how it works. The relay is a Dow-Key with a 117 VAC coil. One side note about relays -- the Dow Key with type N connectors introduces no VSWR of its own as measured with a GR 1602B admittance bridge while with UHF connectors it is terrible at 432. In addition the isolation is beyond the range of the equipment we have to measure it with (-60db) and Dow Key claims 100 db which may very well be. We have switched 600 watts or rf through ours with no effect on the transistor preamps. The basic idea behind our sequencing system is to operate the ac coil on DC voltage, so a time constant can be easily achieved to delay the switching back to the receive position. The sequence of events is as follows: The main transmit receive switch applies 117 VAC to the system allowing RL-1 to make. The actual exciter output can't come on until RL-1 makes causing RL-2 to make. This also provides a fail safe device in case any component fails in the RL-1 circuit. After RL-1 closes it also switches in extra capacity across it's own coil. This capacitor now charges up with the DC voltage. When the TR switch is turned to receive, the 117 VAC is removed from the circuit which makes RL-2 drop out removing the voltage to the exciter -- thus RF drive is removed. RL-1 holds in until the large capacitor discharges enough to allow it to drop out. This delay can be adjusted by the size of the capacitor or by a resistor in series with it. I haven't given exact values of components, as it is best to adjust these to your individual relay.

VHFER magazine is published every other month by Parks Electronics Lab., 419 S.W. First, Beaverton, Ore. 97005. Subscription rates: U.S. & possessions, $1 per year, others $2 per year. Second class postage paid at Beaverton, Ore. 97005.

That's about it for this month. I haven't heard of any of the large commercial antennas going to be used for MB this summer, so you had best start working on your own echo-producing system -- at least you can work yourself.

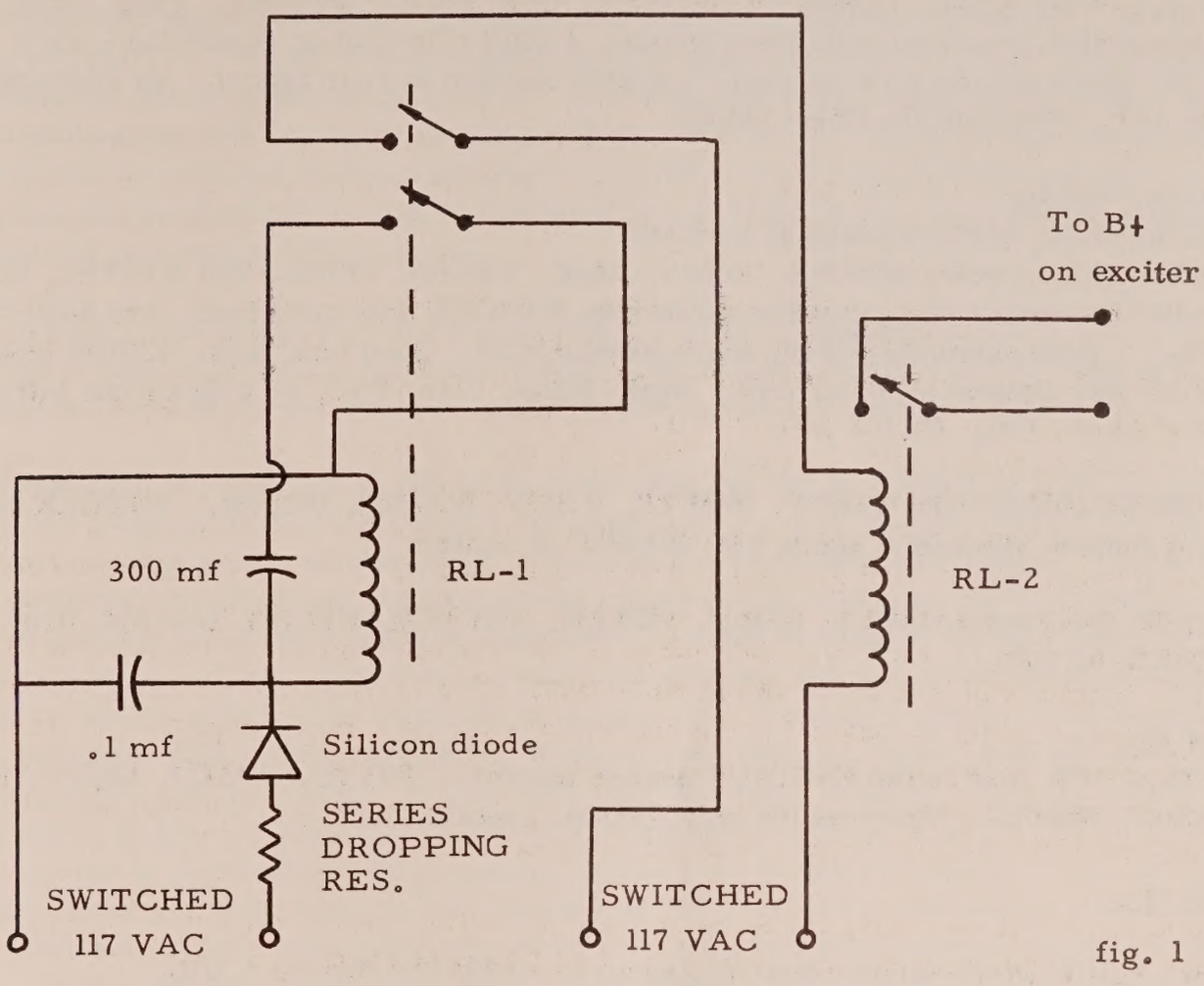

fig. 1

A.R.R.L. CONTEST SKEDS WANTED

The Tektronix Employees' Radio Amateur Club, K7AUO, will be on 2950' Round Top mountain during the June A.R.R.L. VHF contest. Round Top is 40 miles. N.W. of Portland, Ore. We plan to operate on 50 thru 432 MHz and on 10 GHz. Serious DX efforts will be made on 144, 220 and 432 MHz with high power and good antennas. DX frequencies will be 144.010, 221.500 and 432.000 MHz and 10.030 GHz (plus or minus 30 MHz.) Liason will be on 3810 (approx) KHz., SSB.

We are very interested in hearing from amateurs having high-power capability (300-1,000 watts) and good antennas on these bands, especially if they plan "mountain top" operations during the contest. Idaho, Utah, Nevada and Calif. are of most interest.

Write to Gene Single, 1080 N.W. 107 Ave., Portland, Ore. 97229 or make arrangements with a club member on the 3810 Sunday nite VHF NUT NET.

BACK ISSUES

We still have bundles of 11 back issues of 6-up magazine available for $2 postpaid. Also we have all VHFERS for 1965 except Jan. and May. The April issue is now available. Price of back VHFERS is 20¢ each, postpaid. Send cash, check or stamps in payment. If you have any questions about back issues, send a self-addressed card for reply.

OPEN BANDS

by Marilyn Wiseman, K8ALO

Reports down again. I guess no one reads "Open Bands" anymore. I was really disappointed, received only four reports. I can't comment on something I don't have. Hope reports pick up soon. Looking forward to your report. My address: Box 103 Petersburg, Ohio 44454

50 Mc. Scatter

The following stations heard or worked.
K7BBO (Wash) wrkd WB6GKK, K6IBY, K6JC, W6ABN, K6RIL. Hrd WB6FSC, WØEYE. K7BB0 has been running scatter skeds with WB6GKK with good luck. hrs 0600-1000 P.S.T. Next month they'll try skeds around 2330. Good luck boys. K7BB0 looking for 50 mc. scatter skeds to Ariz, Mont, Idaho, Utah, Wyo, or with anyone interested. Dave's c.w. freq. 50.101 mc.

WB6GKK (Calif) wrkd W5KCP, WØEYE, K7ICW, WA6SQI, W6CSB. WB6GKK has been running successful skeds with W5KCP on scatter.

K7ICW (Nev) wrkd W6NLZ, K6IBY, WØEYE, WA6AKM, W6GDO, W6ABN. Hrd K6UNR, K7BBO.

144 Mc.

5-28 K7ICW (Nev) wrkd K6CLM/6 meteor scatter. W6YVO, W6DQJ, K6JYO, K6TSK, W6DEE, W6NLZ. This was the only 144Mc. report.

432 Mc.

3-6 K7ICW (Nev) reports hearing Oscar 4. Orbit 186 Beacon + IDB.
4-1 WA5LGH (Corpus Christi, Tex) wrkd W5LDV (Houston) 220 mi, K5AOK (Victoria) 90 mi 2201-2213. Bill runs 20 watts am. 11 ele yagi 47'.

THE NOISE CLIPPER

If you're interested in weak-signal c.w., which is my prime interest, then you should give some thoughts to building a noise blanker like that in the Nov. VHFER or in the A.R.R.L. VHF manual. In my weak signal tests, using narrow bandwidth, I found the noise blanker (clipper) made quite a noticeable difference in my ability to find a weak signal down in the noise. Another thing I found was that my noise was not as constant as I thought and that apparently much of my noise is power leak noise. Now some power leak noise is obvious, but mine wasn't. In fact I didn't know I had any appreciable amount until the noise blanker started telling me I was mis-informed. I'm sure many of you are in the same boat. My improvement was at least 3 db, since with the blanker I could find and hold a weak signal that I otherwise could not find. I'm not sure how many db that is but it is significant enough for me. The shortcoming of such devices I've seen so far is that they are so broadband that a station up the band a few hundred kc puts you out of business if he's strong enough. I don't see why such broad bandwidth is necessary. I would think clipping at bandwidths of 10 kc would be quite adequate for the noise pulses are of short duration and the ringing time of the 10 kc circuits would be quite short compared to that of the narrow band I.F. circuits. Also one should be able to make it with transistors if he is familiar with the taming techniques. If you have done such, please send us the information.

W6GGV'S TRANSISTOR CONVERTER FOR 220 MHz.

Some months ago Hank Meyer, W6GGV, took it upon himself to design a basic converter whose layout was essentially the same for 144 thru 432 MHz. At least part of his motivation was to help us get into all solid state converters, so he designed it for production economy as well as performance. We have two of these converters here now, one for 432 and one for 220. We have been testing the 220 converter (with TIXMO1 transistors) and believe its performance is so good and the construction so simple that it would be a good building project for many of our readers. The parts cost is low and the parts are available from Allied Radio in Chicago. Probably everything but the transistors and the crystal can be obtained locally. Outside of the crystal, parts cost would be about $10 if you have a reasonable VHF junk box.

In this article I will bring out some points which may be of interest to you if you have had problems in building all-transistor converters. So if your interest doesn't happen to be 220, though I hope it is, you could possibly derive something from the article.

Some discussion of problems at 220 is in order because 220 is a different kind of band. Not that the propagation is so different, because it isn't. But the interference can be pretty bad in some areas, particularly in the big cities and near the coasts. For one thing, channels 12 and 13 are right below the band and they can give lots of trouble. They can get into the front end and be amplified so there is a signal level of volts by the time it gets to the mixer. This I have measured with our 220 converter using nuvistors at my QTH which is just a few miles from channel 12. We used a sharp, series tuned trap to minimize that. The converter to be described does not have a trap but does use two fairly sharp tuned circuits. It also uses only one stage of gain, which adequately covers mixer noise. A good rule to follow to minimize overload is to get your selectivity as close to the front end as possible. If you have to use two stages of r.f. to get the noise figure you want then you are increasing the overload possibilities. This converter with one stage of gain measures about 5 db with everything peaked up on a weak signal. This is the way most hams tune. Not the best, perhaps, but about the best most do. We didn't try to improve it over that because 5 db is a very respectable noise figure at that frequency and it came without much effort and with 50 cent transistors. There is adequate output to cover the noise of a decent communications receiver. It is possible that a cavity filter might be needed ahead of it in certain areas, especially if you're mountain topping near the big cities. If you use an I.F. lower than 26 Mc. you may put your image into a TV channel and that wouldn't be good because the lower I.F. then demands more selectivity of the r.f. tuned circuits and that can be hard to come by without going to a cavity filter. Good receivers are plenty stable at 26 or 28 Mc. and the tuning rate is OK. There is no point in going to a low I.F. if you can use a high one.

Another problem at 220 is pulse-type interference from other services. Maybe it's radar or positioning. All I know is it can raise heck. In some areas they minimize this effect by using polarization opposite to that of the interfering signals. I believe that noise blankers help with this--like that in Nov. VHFER but built for a proper I.F.

Stability at the higher frequencies can be a problem, and for that reason this converter uses a zener diode voltage regulator. While temperature compensating capacitors and other devices might improve stability it is good enough for most service as it stands.

Self-oscillation at the higher frequencies both with tubes and transistors has been such a problem to so many builders that they give up and buy a converter. While the prob-

lem of self-oscillation did not occur in this converter (it passed reasonable stability tests) it is possible you could have problems. The inclusion of an r.f. gain control in the converter gives control over any tendency to self oscillation and also permits reduced gain for strong signals or where cross modulation is a problem. We found that the gain peaks nicely with the control and that there was no instability tendency. One common problem hams have with front end stability at high frequencies has to do with the impedance they hang on the front end. A marginally stable r.f. amplifier may work well with a broadband source impedance such as a 50-ohm resistor. But when you hang a balun on the front end, the balun looks like 50 ohms (if you're lucky) at the operating frequency but is reactive at other frequencies. A lot of the high-performance transistors now in use will oscillate at frequencies of 800 to 1200 MHz. They will use that reactance to advantage as a tuned circuit to make an oscillator and away you go. The r.f. amplifier may still work fairly well with that parasitic oscillation, but the tuning is invariably erratic & you hear little birdies going by from time to time. So beware of the balun near the converter. It can work fine, but sometimes it doesn't.

Another problem with transistor preamps or converters is r.f. damage from leakage thru the coax relay or from a harmonic of a high powered transmitter on another antenna near by. We added a couple of diodes to Hank's converter, back to back, and found no effect on the noise figure. We used the 1N6075 which is a very fast germanium diode. I couldn't find them in the catalog and I really don't know how much good they will do but suspect they are good insurance. Other fast germaniums would probably work as well. I wouldn't use silicons because they take too much voltage to get going. Maybe our diodes would do better in another part of the circuit.

I'm sure a lot of you have had trouble getting transistor oscillators to work right. Note that this circuit does not have a feedback capacitor from collector to emitter. Whether or not a small capacitor is needed depends on the transistor, the bias current and where the tap on the coil is. The TIXMO1 is so "hot" it didn't want a capacitor there. Odd tuning characteristics and spurious oscillations result from too much feedback. If there is not enough feedback, the thing won't go at all. If you do need feedback, use a "gimmick" capacitor made of two short lengths of enameled wire twisted together and adjust the number of twists for best operation. Sometimes odd oscillation characteristcs or erratic multiplier operation can seriously degrade the converter's noise figure. You'd probably be hunting for the problem in the r.f. stage or the mixer and of course never find it. You will see that there is no resistor in the emitter of the mixer stage. This is no error. In our 432 converter there is no resistor in the emitter of the multiplier. I won't theorize on why this is because I'm not qualified. But it works best that way.

The power supply uses a bridge rectifier and a 6.3 volt filament transformer. Any little silicon power diode with a peak inverse voltage of 50 or more will work here. The 50-volt kind are available for a nickel apiece. You should use the big filters and the zener diode if you want stable operation under varying line voltage conditions. The transistors do not like overvoltage for long periods. I've lost several in my medical telemetry equipment by not watching this, so I suggest you keep the voltage under control. Current drain is only 7 ma. so flashlight batteries would work fine for a long time.

The converter is built on a thin brass panel with brass partitions bolted and soldered to the panel and to each other. The panel size is 3 1/2 x 6 inches and it fits in a plastic meter case box available from Allied radio and some distributors. The boxes are made by Harry Davies Molding Co. but sometimes marketed under other names.

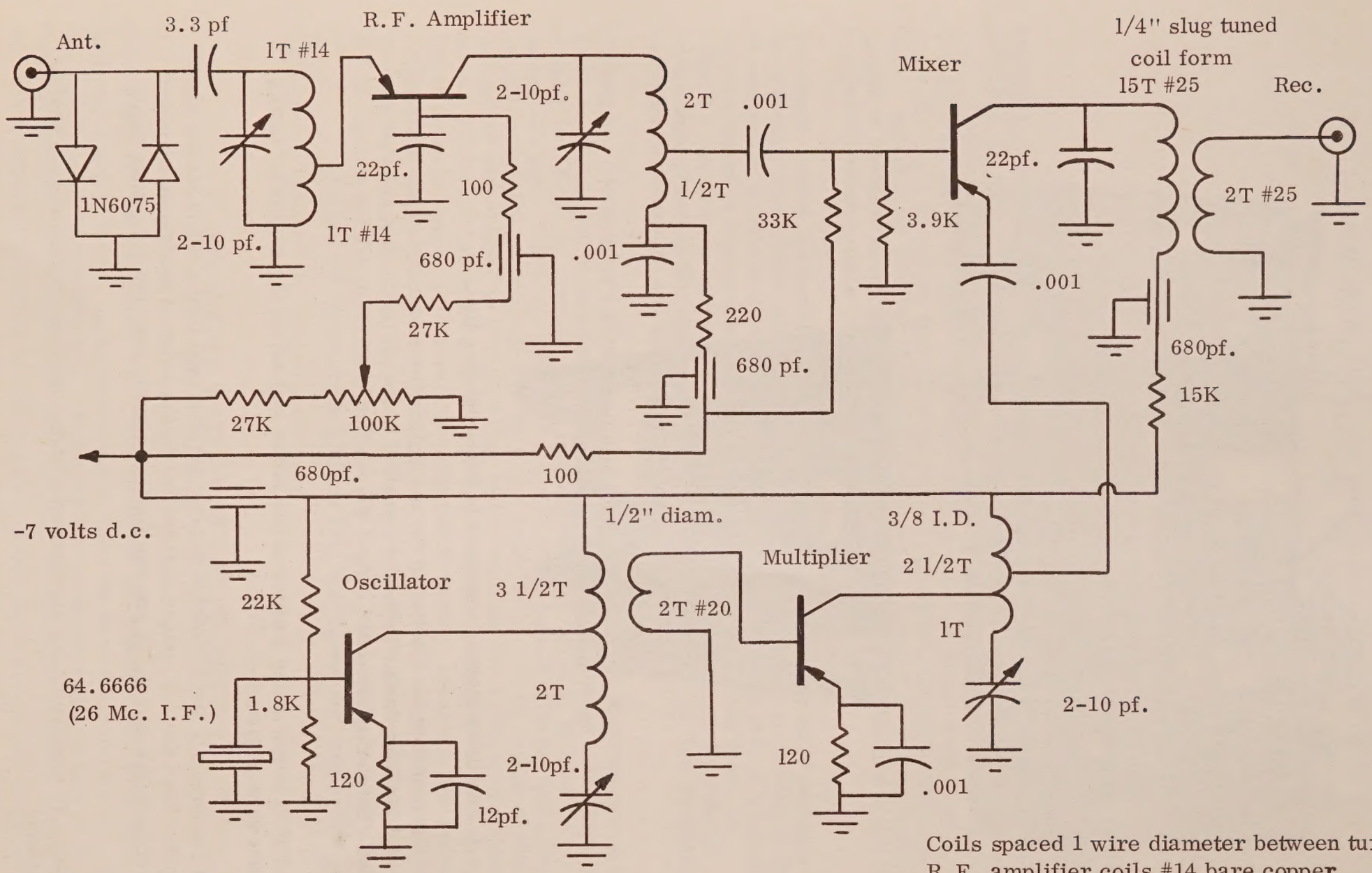

Coils spaced 1 wire diameter between turns
R. F. amplifier coils #14 bare copper
All transistors TIXMO1
Filter caps. Mallory MTA 100 E 15
1N6075 diodes available from Parks Elect. for 50¢ in stamps (for a pair) plus self-addressed, stamped envelope.

W6GGV 220 Mc. CONVERTER

If there were any change I would make in the layout it would be to relieve some of the crowding around the multiplier. Extend the brass plate to the end of the panel and move the oscillator tuning condenser and coil closer to the edge.

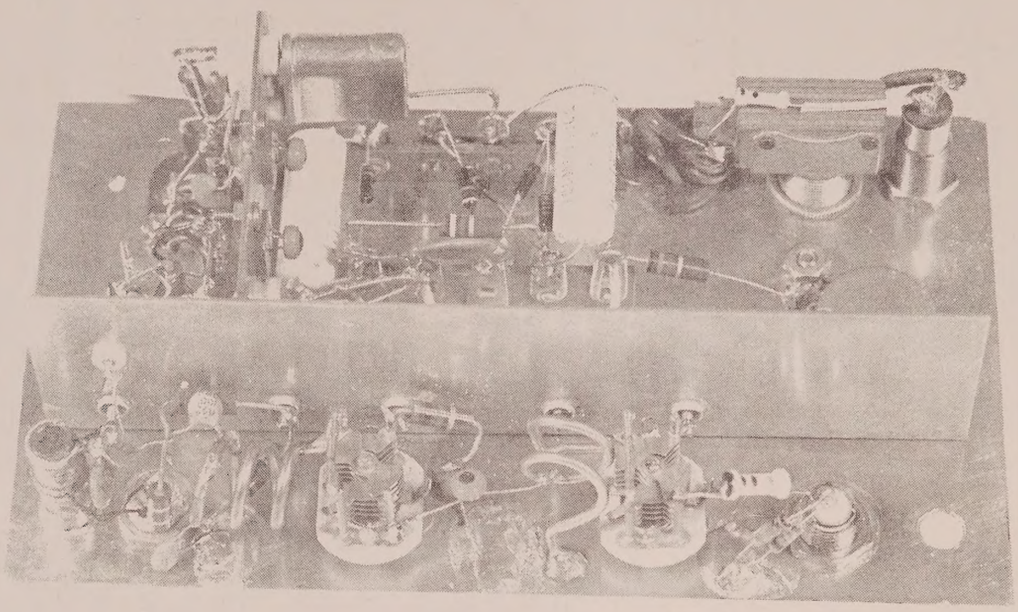

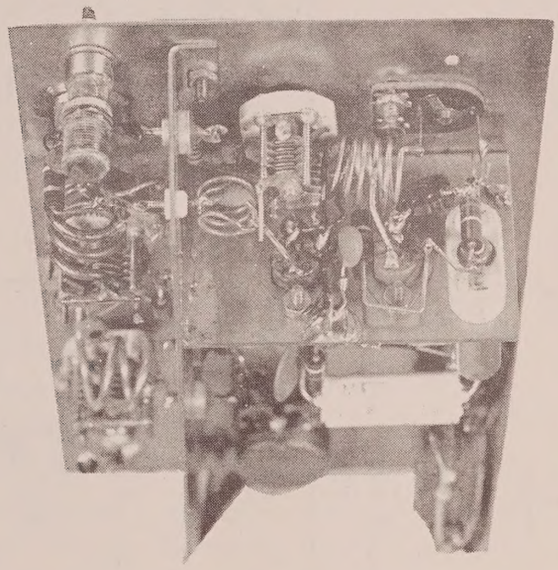

TUNE UP

1. Set the r.f. amplifier tuning capacitors to half-open position.

2. Put a VTVM probe on the emitter of the multiplier transistor and adjust the oscillator capacitor until the meter indicates a peak of about .25 volt. If it does not peak at one point in the tuning capacitor range, the oscillator probably isn't working. If there is erratic action, the oscillation may not be controlled by the crystal.

3. Put the VTVM probe on the emitter of the mixer and adjust the multiplier tuning for maximum voltage (about -1.75 v.)

4. Connect the output of the converter to your receiver and feed a fairly strong signal into the input. Tune the I.F. output coil for maximum noise at the frequency where you expect to hear the signal. If you can find the signal, peak the r.f. stage tuning capacitors.

5. Adjust the r.f. amplifier bias for maximum signal strength or best weak signal to noise reception.

Normal values: The voltage across the zener diode should be about -7 volts. Collector current in the mixer should run about 200 microamps.

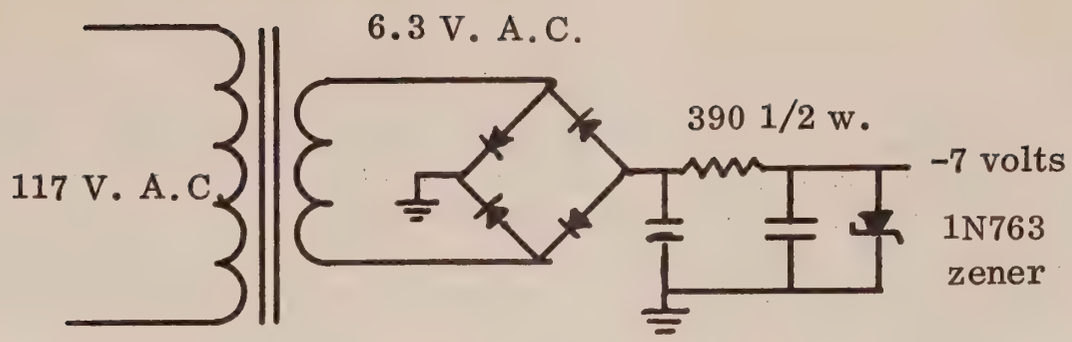

Capacitors are Mallory 100 mfd. 15 v.

Power Supply for W6GGV 220 Mc. Converter

EXCERPTS FROM PROJECT OSCAR NEWSLETTER

OSCAR 4. Until recently, it was assumed that OSCAR 4 quit operating during orbit 211 (16 March) because no reception reports have been received since that time. However, a letter received on 14 April from ZL1WB reports tracking OSCAR 4 as late as 10 April. His observations since 19 March have been for short durations (not more than 15 minutes) and the signal was apparently quite weak. The present location of the orbit (perigee at northern most extreme and apogee at southern most limit) is undoubtedly responsible for the lack of northern hemisphere observations.

The short tracks reported by ZL1WB strongly indicate solar panel damage, but we presently do not know whether the problems are permanent (radiation damage) or temporary (temperature effects). Only time will tell. The lack of tracking reports makes it impossible to generate orbit predictions at this time. If OSCAR 4 continues to operate, it may be possible to get additional southern hemisphere tracking data and make new orbit predictions by the time northern hemisphere observers can again "see" the satellite.

OSCAR 5. Development of new satellite packages has been underway for several months. One group in Germany is actively working on a package with characteristics similar to OSCAR 3. Another group in Sunnyvale California is at work on a 2 to 10 meter package. There are some 432 and 1296 MHz beacon modules and a multi-channel telemetry package already built and ready to go. Work is also proceeding on another unit similar to OSCAR 4 that will be suitable for a near-synchronous orbit. There are two other groups, one in Australia and another in Canada, that are in various stages of proposals for launchable items. All in all, the future looks rather promising as far as amateur space activity is concerned. You will note that we bypassed the problem of launches. It must be understood by all concerned that any rides into space are obtained through the good graces of the launching agencies and are normally granted only on a space available basis - no pun intended. We must first get the equipment built. Then, and only then, can we approach the appropriate agencies for launch assistance.

4th ANNUAL WEST COAST VHF CONFERENCE
MAY 14-15

Time again for the west coast VHF D-X addicts to get together and swap lies, compare converters and preamps, measure antennas, hear tapes of d-x and listen to well-qualified speakers on VHF techniques. The informal conference will be held at the Miramar Hotel on highway 101 in Santa Barbara, Calif. The Miramar is on the ocean beach with lots of recreational facilities for the family. Room rates are as low as $5 singles, $8 doubles. No charge for anything but your meals at the convention. Remember that air excursion fares are lower now if you fly at the right time.

W8ROF's 432 YAGI

Lee Ewald, W8ROF, sent me information on his 432 yagi I thought you might be interested in. You probably are aware of the fact that the Yagi is in disfavor among a lot of 432 men because of poor performance. They favor the colinear, and with good reason. But it isn't that the Yagi is by its nature bad at 432, because it isn't. It's just that most designs are bad, the result of scaling from lower frequencies without scaling also the boom, etc. And we all know that anyone can build a colinear and make it work.

I wouldn't publish just anybody's antenna dimensions, throwing them out for anyone to try. Lee has made measurements on some other published designs with which west coast hams are only too familiar. So I believe his measurements are quite likely in the right ballpark and present them to you as outlined in his letter. L. Parks

Noting articles of late on 432 Yagis, I thought you might be interested in the design parameters that I arrived at after many weeks of experimentation. Building several long Yagis re _____, a loss of 3-5 db existed compared to the 16.1 db spec.

Finally, I came up with one that showed close to 16 db gain. I'm now using 4 of these spaced 2 wavelengths vertically and horizontally, and all indications show that this array is considerably better than my 64 element colinear. Dimensions are as follows:

SPACING		ELEMENTS	DIPOLE
R-D. el.	6 1/4"	Reflector 13 3/8"	Delta matched as
De-D1	2 1/16	Driven El. 12 3/4"	described by Ed
D1-D2	2 5/16	D1 thru D11 11 15/16"	Tilton in QST
D2-D3	2 3/8	All elements 1/8" alum. rod	
D3-D4	5 1/16		
D5-D6	8 15/16		
D6/D7	9 1/2"	BOOM	
D7-D8	10"	1/2" square alum. tubing	
D7 thru D11	10" each		

Lee Ewald, 7453 Freda, Dearborn, Michigan 48126

MONITORING FOR SPORADIC E ON TWO METERS

Last July 4, eastern Europe had a two meter sporadic E opening of some two hours duration. During that time there was a contact betweing EI2W and YU1EXY, a distance of about 1400 miles. There have been a number of openings in the U.S., but possibly many more were missed. One of the advocates of constant watching is Shelby Ennis, W4WNH. He also runs his beacon stations whenever the skip is medium to strong on TV channel 5. He says, "Whenever there is evidence of a build-up (on 11 meters, 6 meters or TV), we try to keep the TV receiver going constantly to watch for a possible 144 Mc. opening. The XYL checks it regularly for me when there is a possibility of an opening and I am not at home."

W4WNH stresses the need for regularly monitoring some frequency, such as Channel 5, to watch for a build up. Then you need to transmit and monitor a known two-meter freq. as soon as things look at all possible. The openings are not predictable and are of short duration. W4WNH's operating frequency is normally 144.099 but during a possible E opening he moves to 144.100 and runs the beacon which says "V V V de W4WNH". Antenna headings may be anything, depending on what he hears at the lower frequencies. Power is 1 KW to a 16 el. colinear. More information is available from him at Rt #1, Germantown, Kentucky, 41044. Phone is 728-2746. Area Code 606.

Last month I wrote about our successes with the Kmosko and Johnson long Yagi described in QST ten years ago. As a result of numerous "on the air" tests since the last issue came out, I believe our former opinion was pretty valid. The path between Portland and Sacramento, Calif., never workable in the past, is now workable about 75% of the time. Variations in propagation are quite evident. We are not talking about pings, but signals which are in and out of the noise. The additional gain that antenna provides has made the difference between contacts and no contacts for W7UAB and W6GDO. We have not yet made a serious attempt at gain measurement. For those of you who don't go for the silver-plated steel elements, we used un-plated brass tubing. Probably not quite as good but adequate for the time being.

DELIVERY PROBLEMS WITH THE TIXMO5

We've had a number of articles on converters and preamps using the TIXMO5 and that is coming to a grinding halt right now. If you can't buy them you can't build the device so some sort of adjustment has to be made. I have had these transistors on order since ~~mid~~ mid-December. All I get is unfilled promises from times like "soon" to April 25 to June first. I don't believe anything they say anymore. I'll believe they're coming when I see them here and not until. All those who sent money in good faith for the transistors have either gotten it back or the later orders were held for possible filling at the April 25 target date. I offered the transistors on the assurances of the TI rep. that they would be able to get them to me by the time the mag. was out. So if you have money here you will probably get it back unless you request I hold it for eventual delivery of the transistors.

Now you may wonder how we're filling our converter orders if things are so tough. I'll tell you this much, darned few had a TIXMO5 in them (a green dot on the transistor). We had some TIXMO6s on hand which we found frequently did better than the general run of the MO5s. Then we were accidentally shipped some MO8s and they did well too. Of course we have had to do some selecting. Now we have MO1s and MO2s and when selected they are doing as well as the MO5 or at least well enough to meet the spec. we set up. I would hate to put a firm number on it but we suspect its about 4 db and at any rate better than the 2N3399s ran. How much difference your ear can tell is of course another story. Certainly not much if anything.

Now if you're building the converters and preamps we've described in VHFER or those elsewhere I would like to suggest how you can get along without the MO5. Try some of the others. The MO6 is probably the best of the others but I think they are now about as unavailable as the MO5. Then try the 08 and 01. One transistor you can get that is good is the TI-400 at 89 cents in singles. In some circuits it can be a little rough to tame but in r.f. amplifier and multiplier circuits it seems to work easily and well. I think it is about equivalent to the 2N3399.

Now there are a number of other transistors on the market and you can hear claims about how hot one is over another. Keep in mind that darned few have proper equipment and know how to really make an evaluation. Another thing is that there is no point in paying a premium for an ultra-low-noise transistor if you aren't set up to get down to the noise figure it is capable of delivering. You don't just build something and automatically have best performance in most cases. Even though we've made 2 or 3 hundred 432 converters we have to tweak up each one and prove it out with the noise generator. In time and with experience you get so you go thru a certain procedure which will get you close to optimum. But then you have to adjust it in with the noise generator's aid. The point I'm trying to make is, don't put off building for want of an MO5. Try something else and

VHFER CUT TO 6 TIMES A YEAR

The work behind a little magazine such as this is more than you can imagine. It is pretty much killing a week of my time every month, besides that of some of the help. VHFER is a non-profit magazine and I feel I can no longer afford to lose a week out of every month.

The next issue will be a May-June issue. The magazine size may vary, depending on what we get in and how much work it is to get it ready. The big problem is in getting a balanced selection of "clean" articles. By clean I mean something that is correct and if constructional, is well-explained and obviously written by someone who knows what he's doing. I like to have one or two constructional articles each time and the rest news and techniques. The constructionals are hardest to get. We have turned down a few articles which were well-done but used expensive tubes where inexpensive transistors would have done as good a job or better at a small fraction of the cost. An article should have the prospective builder in mind, realizing the limitations on his pocketbook and available constructional facilities. With some more advanced equipment design we realize that money and metal-working equipment must be available and we wouldn't reject something like that. The number of quality articles we receive is very small, and we appreciate each one. We do not pay for articles. I have two views on this. One is that it's throwing good money after bad. The other is that a person who writes for a few bucks to put in his pocket must need the money pretty bad. That means he's not making much at his job and there's probably a good reason for that. I realize there are some exceptions to this generalization. The authors we want are those few dedicated hams who get satisfaction from seeing others benefit from use of their designs.

My function as editor should be to screen the articles for errors and present a balanced magazine. If that was all I did there would be no problem. Instead I type, photograph, edit, proof, ghost-write, print and cart the stuff to the bindery in Portland, etc. The problem isn't money except that so much time goes into VHFER that it keeps me and my staff from working on our medical products which are our bread and butter.

As of now at least, those of you who paid $2 for a year will get 12 standard size issues for that or half as many double-size. In other words, you'll get what you paid for. Subscription rates as of now are $1 a year but may go back to two if we can get enough material to essentially double the size of the magazine.

If we could have 2 or 3 hams who could (and would) come up with an article every 2 or 3 months it would help a lot. We couldn't get along without the help of Victor Michael, Marilyn Wiseman and Al Olcott. Subscriptions keep increasing at about 100 a month recently. Total is about 1700. Advertising is $20 a page. How about some articles? Loren K7AAD

METEOR SCATTER SKEDS WANTED

Want 2 meter m.s. skeds. Have 32 states and need Kans., Nebr., Ark. and Vt. but will work others. Rusty Holshouser, RFD #1 Box 212 Salisbury, N.C.

Want meteor scatter skeds in La., N. Dakota, Montana, Wyoming, New Mexico.
Lewis Munford Box 11 Bridgewater, Michigan.

TWO METER MOONBOUNCE

I talked with W6DNG the other night to get the dope on current 2 meter m.b. activity. Bill said there had been a couple of attempts by Australia and Europe but results were not good. The main problem is that hams on the other end can't or won't elevate their antennas. That 10 db or so you theoretically pick up going along the ground is probably n.g. in the cities so elevation is a must. Also it is too hard to make skeds at reasonable times. Tests continue with OH1NL in Finland with new techniques giving good results.

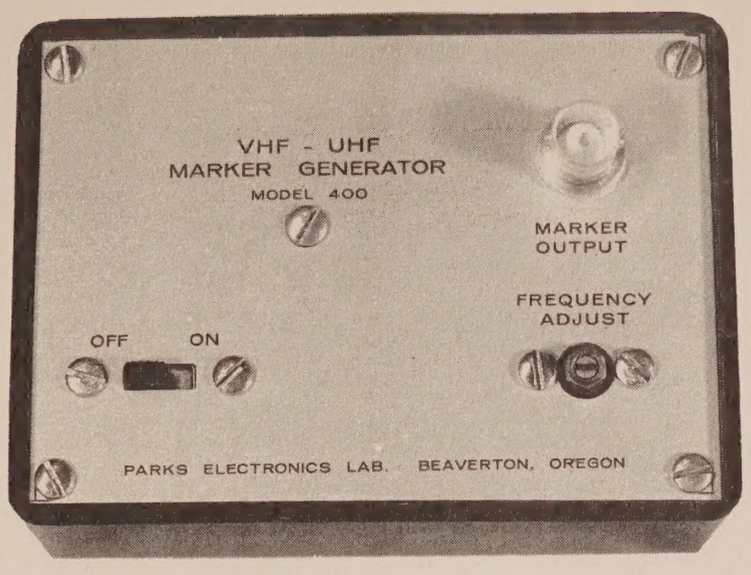

This marker generator puts out harmonics of 1 Mc. from 2 Mc. thru 1296. It uses a 1 Mc. crystal oscillator driving a tunnel diode. The tunnel diode switches at a very fast rate generating strong harmonics every 1 Mc. (the switching rate). Adjust against WWV and be sure of band edge calibration and 1 Mc. intervals. Can also be used as a weak-signal source for adjustment of antennas & converters. Operates from self-contained penlight cells. $25 postpaid.

Nuvistor
CONVERTER
$54.95 postpaid

- Noise Figure less than 3 d.b. over full 4 Mc. Bandwidth.

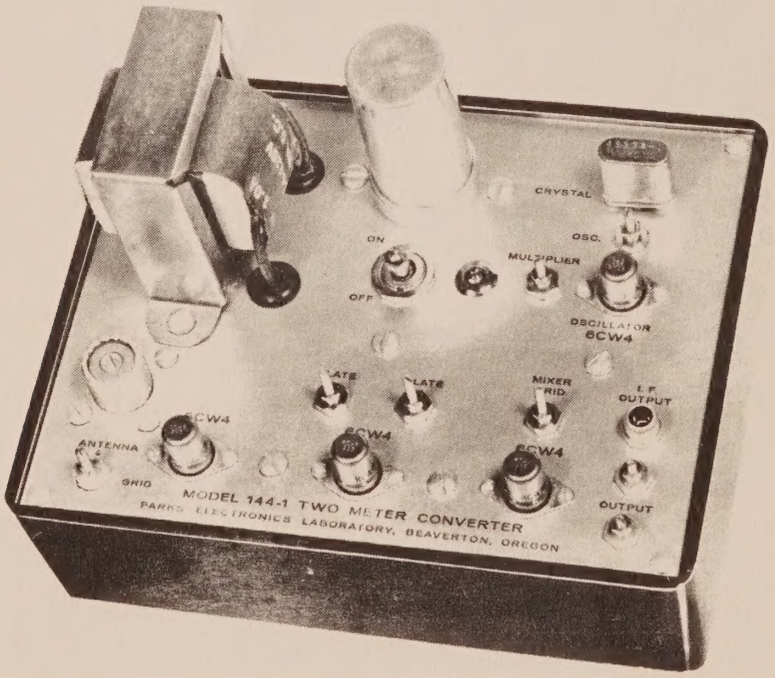

Here is the converter that has been accepted by advanced hams all over the U. S. A proven performer for weak-signal work. I.F. ranges available put 144 Mc. at 7, 10, 14, 21, 22, 24, 26, 27, 28, 30.5 or 50 Mc. Choice of connectors: UHF in, phono out (shown) or BNC in and out. Available from stock.

PARKS ELECTRONICS LABORATORY
ROUTE 2, BOX 35 • BEAVERTON, OREGON

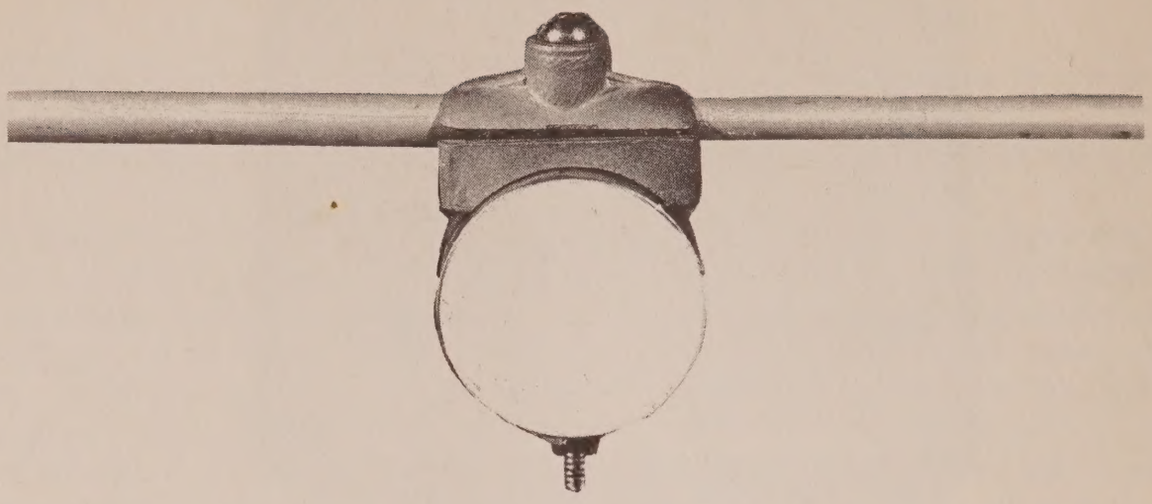

ANTENNA ELEMENT MOUNTS

If you like to build your own antennas, consider these mounts which will make your antennas more rugged and easier to build. An antenna made with these mounts is a whale of a lot easier to tune because you can change element spacing easily. Otherwise you have to drill big holes in the boom and just guess where the element would work best. Remember that on a Yagi there is an optimum element length and element spacing for maximum gain and a given element and boom size. Adjustment near the driven element is very critical. When you can move the elements along the boom and note the immediate effect on gain, you can easily see when you're getting somewhere.

Element mounts are in two pieces with holes in the middle that pass the mounting screw. Mounts are die-cast from Zamac and are iridite treated to resist corrosion. They are RUGGED. My 6-meter beam came down and broke the boom, but not the element mounts. I've never seen a broken one yet. The upper part has a V contour so it will fit snugly over elements from 3/16 to 3/8" in diameter. The bottom part fits 1 1/4" TV mast, available everywhere in 10-foot telescoping sections. The mounts will work well with 1 1/2" booms too. Choice of hole size for No. 8 or No. 10 machine screw. Four sets (to mount four elements) for $1 postpaid in U.S. & Canada. 25¢ for each additional set (to mount 1 element.)

Order from Parks Electronics Lab., 419 S.W. First, Beaverton, Ore. 97005

Published by Parks Electronics Lab.
419 S.W. First
Beaverton, Ore. 97005

. J. O'brien
606 Fifth St.
.io Linda, Calif. 95673

9

W6GD(
M/67

Return Requested